SET BIJOU

Built in basin grinded
81122.0

TECHNICAL DATA

Order no.	81122.0
Dimensions	445 x 400 mm
Inside dimensions of the basin	415 x 365 mm
Specification	Charge 000 – 1 centre tap hole
Special specification	Charge 111 – 1 centre tap hole, without overflow Charge 155 – glazed outer surface
Weight	7,0 kg
Mounting acc. incl.	Template, order no. 89980.1
Mounting acc. excl.	Mounting set, order no. 89904.0
Colours	see colour table

SPECIFICATION TEXT

Built in basin grinded Laufen-BIJOU, sanitary ceramic
dimensions 455 x 400 mm, inside dimensions of the basin 415 x 365 mm, symmetric
1 centre tap hole, overflow in front
Special feature: overflow channel glazed
Further options: glazed outer surface, with or without overflow
Order no. 81122.0
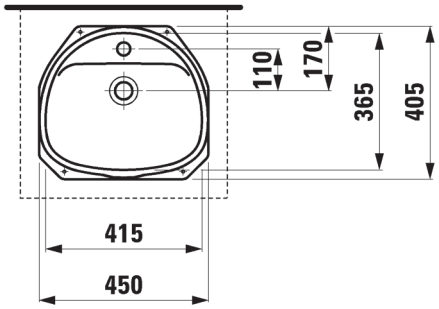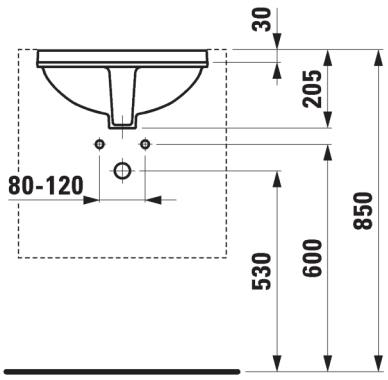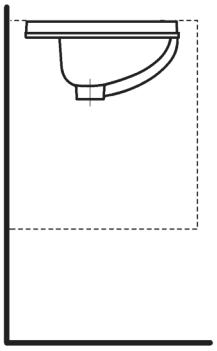
TECHNICAL DRAWINGS / S 1 : 20