# Metropole

| Description | Metropole V-Care Smart WC Pan |
|---|---|
| Code | 5674B003-6103 |
| VitrAclean | No |
| Free Assembly | Yes |
| Colour | White |

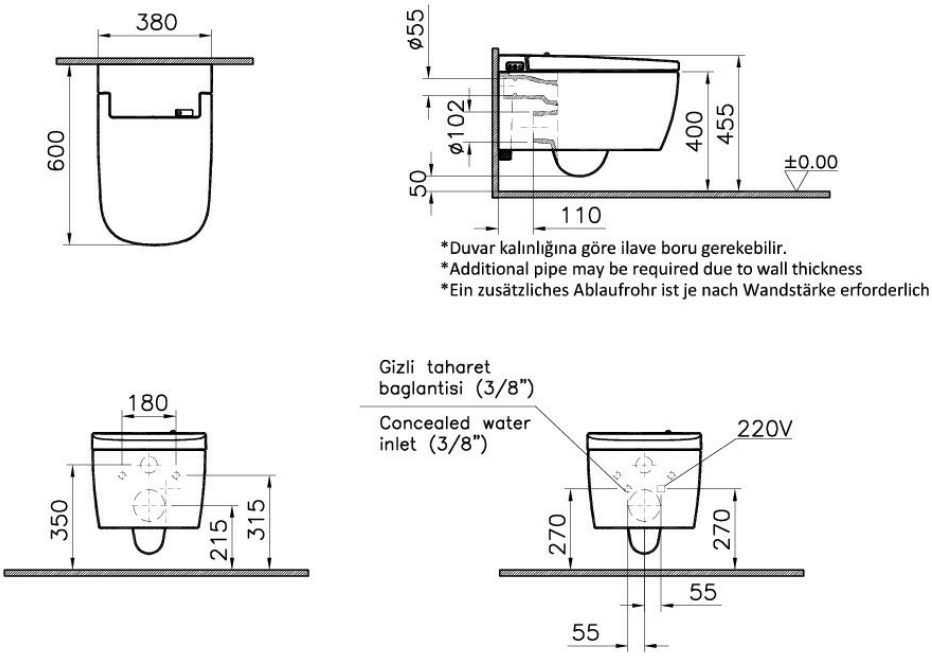


VitrA retains the right to change details about the products and technical specifications without prior notice.